Key

PROGRAM 1004

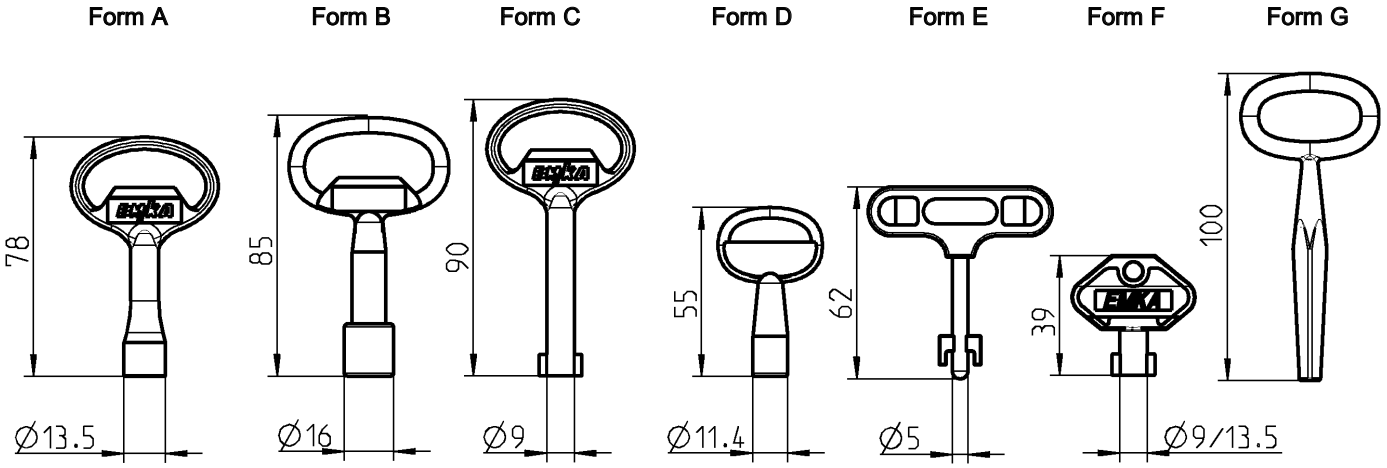

Keys can be supplied on request with customer logo

Minimum quantity: Form A, B, C, D	2,000 pieces
Minimum quantity: Form E, F, H	5,000 pieces

Key-Form	A	B	C	D	E	F	G
	Zinc die black p.c.	Zinc die black p.c.	Zinc die black p.c.	Zinc die black p.c.	Zinc die/ polyamide black	Polyamide GF black	GTW nickel
Square 6	1004-18	–	–	1004-20	–	1004-37	–
Square 7	1004-01	–	–	–	–	1004-36	–
Square 8	1004-02	–	–	–	–	1004-35	–
Triangular 6,5	–	–	–	1004-21	–	–	–
Triangular 6,5mm CNOMO	1004-26	–	–	–	–	–	–
Triangular 7	1004-03	–	–	–	–	1004-39	–
Triangular 8	1004-04	–	–	–	–	1004-38	–
Triangular 10	–	1004-24	–	–	–	–	–
Crown type	–	1004-31	–	–	–	–	–
Eastern Europe Ø13 half round	–	1004-42	–	–	–	–	–
Double bit 3	–	–	1004-05	–	–	1004-34	–
Double bit 5	–	–	1004-06	–	–	1004-33	–
Male hexagon 11.1 with indicator	–	1004-54	–	–	–	–	–
Daimler Benz	1004-17	–	–	–	–	–	–
FIAT	–	–	–	–	1004-41	–	–
Square male 6	1004-29	–	–	–	–	–	–
Square male 8	1004-30	–	–	–	–	–	–
Square male 6 – 9,5	–	–	–	–	–	–	1004-19
Hexagon head 8 with boring	1004-49	–	–	–	–	–	–
Tube	–	–	–	1004-51	–	–	–

Form H

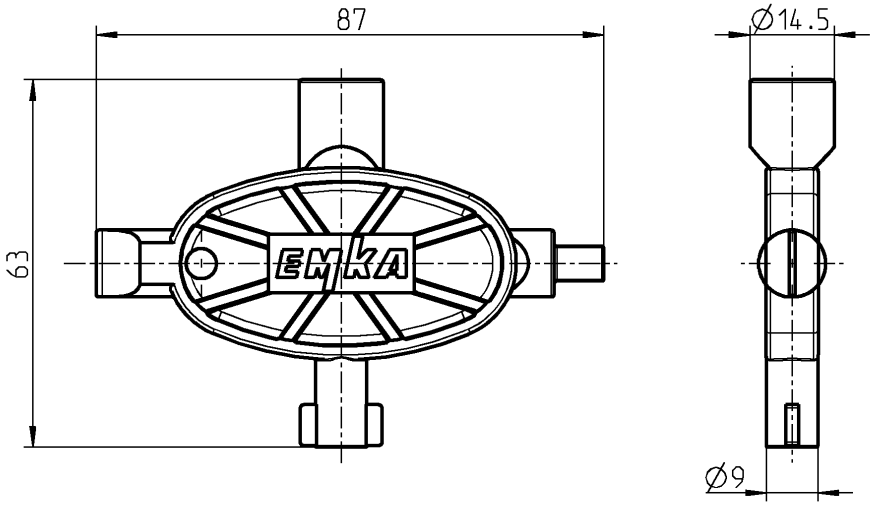

Form H, universal-key polyamide blue	
Square male 6, Square 8, Double bit 5 and Slot insert	1004-48

Form I

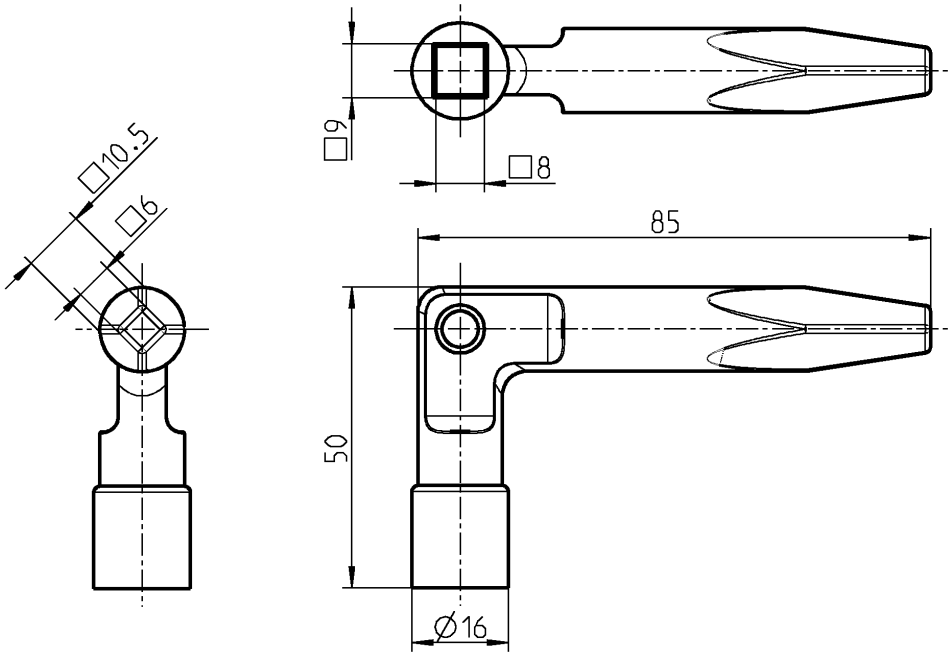

Form I, railway version, zinc die black	
Square 8 - 9, square male 6 - 10,5	1004-52

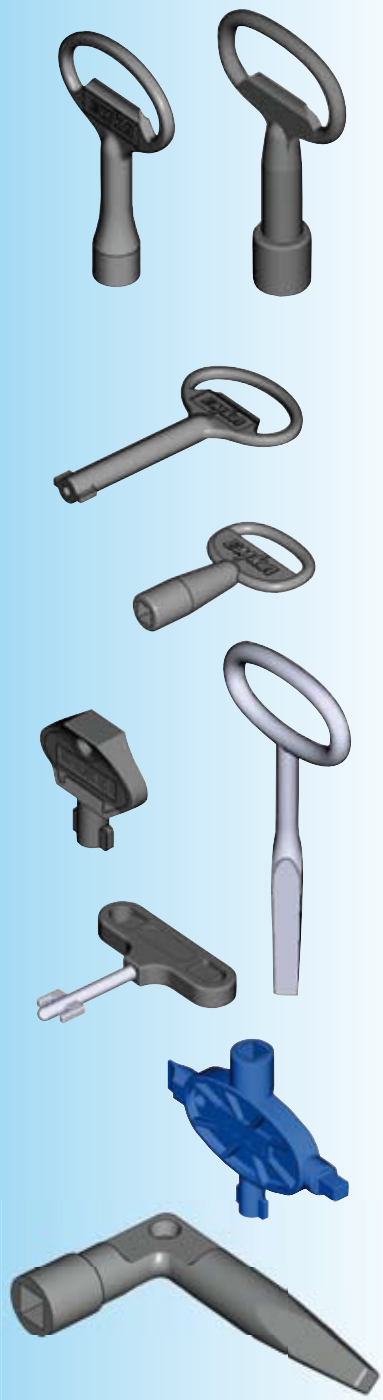

Attention:
Keys from A, B, C, E, F, G and I not siutable for program 1022

Stainless steel key on request